PRODUCTION | PIPELINE | STORAGE | REFINERY | TRUCK | MARINE | AVIATION | LABORATORY

Kam®

Simple Precision™

M E A S U R E M E N T & A N A L Y S I S

# Kam® OWD®

Water Cut Meter

The patented multi-antenna design on the KAM® OWD® provides continuous accuracy 0-100%.

PTB 08 ATEX 1026

## APPLICATIONS

- Truck, marine, and rail loading and unloading
- Automatic well test and test separators
- Real-time production management
- Refinery: incoming crude stream, feedstock

## OUTPUTS

- 4-20 mA (2)
- Alarm or relay
- RS232 for calibration/ diagnostics
- RS485 Modbus
- HART protocol (optional)

## KEY FEATURES

- Variable range from 0-1% to 0–100% water in oil
- 1% of full scale accuracy
- Automatically detects transitions between oil-continuous and water-continuous modes and monitors both modes simultaneously
- No salinity offset required
- Automatic temperature correction
- All requisite electronics housed within unit
- Automatically corrects for varying density with input

## AVAILABLE MODEL AND MOUNTING OPTIONS

- Insertable model with 2″, 3″, or 4″ flanged sealhousing or 2″MNPT seal housing (SHOWN)
- Flow through model with ½″, ¾″, 1″, or 2″ FNPT
- Flow through spool model on 2″ seamless pipe with weld-neck flanges; Integrated KAM® SMS™ Static Mixing Spool; ½″ sample valve with ½″ pitot probe

# Kam® ML™

Measurement Loop

Kam® Simple Precision™

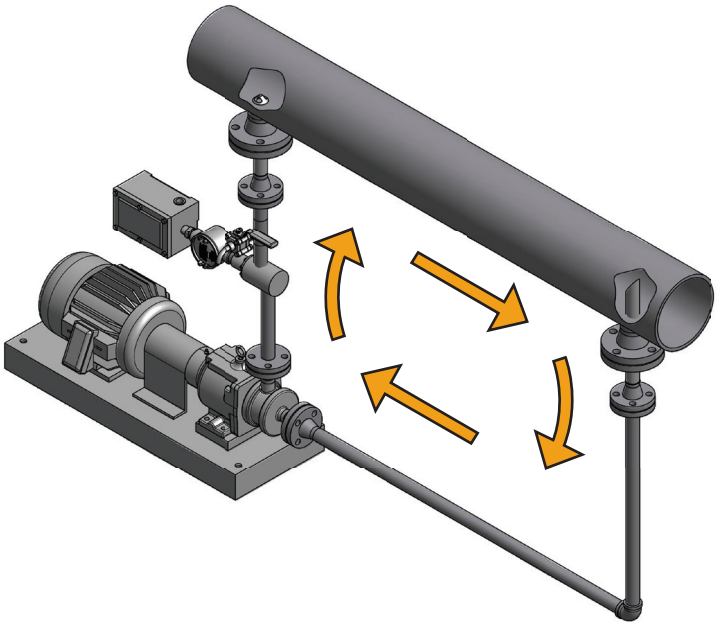

The KAM® ML™ creates a consistent measurement environment and a constant velocity above 7fps, regardless of application, water concentration, fluid viscosity, or temperature.

## APPLICATIONS

- Heavy-oil
- Multi-well manifolds
- Low or inconsistent velocities
- Automated well test and production Management

## KEY FEATURES

Accurate oil/water measurement requires a homogenous flow at all times. The patent-pending design of the ML creates homogeneity by increasing fluid velocity and utilizing a unique injector to create mixing in the main pipeline.

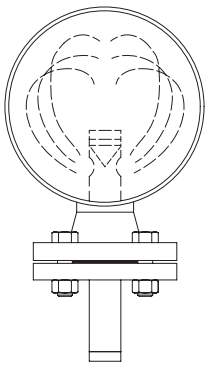

- Creates consistent velocity, droplet-size ratio, and accuracy
- Pump and suction nozzle optimized for individual applications
- Suction and Injector nozzles connect to main line via hot tap
- Injector creates counterrotating vortices for added mixing
- Constant high velocity keeps probe and antennas clean

# Kam® ATD™

Automatic Tank Dewatering

The ATD™ is a water cut meter designed specifically to combat maintenance issues in the tank environment.

PTB 08 ATEX 1026

## APPLICATIONS

- Automatic tank dewatering
- Desalter optimization

## OUTPUTS

- 4-20 mA (2)
- Alarm or relay
- RS232 for calibration/ diagnostics
- RS485 Modbus
- HART protocol (optional)

## KEY FEATURES

- Solid antenna will not clog with debris
- Automatic temperature correction
- Visual and auditory alarms
- Complete system includes controller
- Installs without having to drain the tank
- Minimizes normal maintenance associated with tank probes

## AVAILABLE MODEL AND MOUNTING OPTIONS

- Probes insert into tanks either through a 2″, 3″, or 4″ flanged seal housing or a 2″MNPT seal housing
- Complete automatic dewatering system available, including controller

# Kam® KF

Karl Fischer Moisture Analyzer

Kam® Simple Precision™

PER API MPMS 10.9, EI 386, ASTM D4928, and ISO 12937

At 0.1% water, Karl Fischer is 10 times more accurate than centrifuge and 5 times more accurate than distillation, and analysis takes less than 5 minutes.

KAM® REAGENTS

KAM® HOMOGENIZER

## APPLICATIONS

- Crude oil samples
- Water concentration in refined fuels, including aviation
- Water concentration in machine oils
- Water concentration in hydrofluoric acid

## AVAILABLE MODEL AND MOUNTING OPTIONS

- Portable and laboratory models available
- Homogenizer available with multiple mixing blades
- Premeasured reagents include generator solutions A and C plus check solution

KAM Reagents are packaged by volume for immediate replacement and usage.

## KEY FEATURES

- Fully automatic operation
- Automatic electrolysis control and blank current control system ensures accurate detection of even trace amounts of water
- No reagent calibration and no burettes required
- 5-digit, back lit digital display
- Bar-graph meters monitor progress of titration
- Selectable sample size by volume or weight

# Kam® Satic Mixers

SMP™and SMS™

## Kam® SMS™

STATIC MIXING SPOOL

### APPLICATIONS

- LACT units
- Sampling systems
- Custody transfer
- Water and wastewater
- Pulp and paper
- Gas

### KEY FEATURES

- Achieves turbulent flow at a lower Reynolds number than other conventional static mixers
- High efficiency enables shorter spool with low pressure drop
- Simple and rugged
- No moving parts or outside energy source required
- Fits in 1″ to 96″ pipelines
- Up to ANSI 900

## Kam® SMP™

STATIC MIXING PLATE

### APPLICATIONS

- LACT units
- Sampling systems
- Custody transfer
- Water and wastewater
- Pulp and paper
- Gas

### KEY FEATURES

- Minimal pressure drop
- Simple, lightweight, and rugged with no moving parts
- Optional scoop for mixing highly stratified fluids
- Fits in 2″ to 48″ pipelines″
- Up to ANSI 900

The unique patented design of the SMP™ easily inserts between two flanges saving valuable space and greatly simplifying installation.

# Kam® CSS™

Complete Sampling System

Kam® Simple Precision™

**Meets API 8.2, ASTM D and ISO 3171**

**FLOW METER**
Communicates flow data with Sampler Controller

**KAM® SC™**
SAMPLER CONTROLLER
Paces Sampler based on flow and volume data

**KAM® CSM™**
CIRCULATING SAMPLE MIXER
Mixes sample in Sampler Receiver for laboratory measurement

**KAM® METERIZER**
or **KAM®** Load Cell
Confirms sampling volume

**KAM® SR™**
SAMPLE RECEIVERS
3, 5, or 10 gallon

**KAM® IAS™**
ISOKINETIC AUTOMATIC SAMPLER
Takes samples and deposits them in the Sample Receiver
(0.1 – 3 ml per bite)

The KAM® IAS™ Isokinetic Automatic Sampler employs the simplest design in the industry and is designed to minimize down time and maintenance with convenient features such as fully insertable probes and standard seals and O-rings.

Include KAM® mixing elements for API compliance, and the KAM® OWD® Oil Water Detector for real-time data.

KAM® SR™ Sample Receivers prevent sample contamination with a custom lip seal and incorporate internal spray bars for fast mixing in the lab.

# Kam® OID™

Optical Interface Detector

Detects interface when densitometers cannot, such as between specialty fuels like LSD and ULSD or multiple grades of gasoline

PTB 08
ATEX 1026
PENDING

## APPLICATIONS

- Petroleum products and chemical interface detection
- Product transmix and downgrade management
- Automatic batch detection and cutting
- Quality control

## OUTPUT

- 4-20 mA ouput provides qualitative measurement that can be calibrated to specific pipeline mix

## KEY FEATURES

- Monitors interface and transmix
- Fiber optics within the patented optical probe respond to the absorption, fluorescence, and refractive properties of the fluid
- Lens cleans in place
- Fully automatic measurement
- Data is turned into an analog signal or optical signature which can be sent to the SCADA, PLC's, or to a Central Control Room

## AVAILABLE MODEL AND MOUNTING OPTIONS

- Insertable model with 2", 3", or 4" flanged seal housing or 2" MNPT seal housing (SHOWN)
- FT FlowThrough or Analyzer Loop model with ¾" or 1"MNPT (SHOWN ABOVE)
- "SHOWN" after 1" MNPT

# Kam® CHA™

Colorimeter / Haze Analyzer

Kam® Simple Precision™

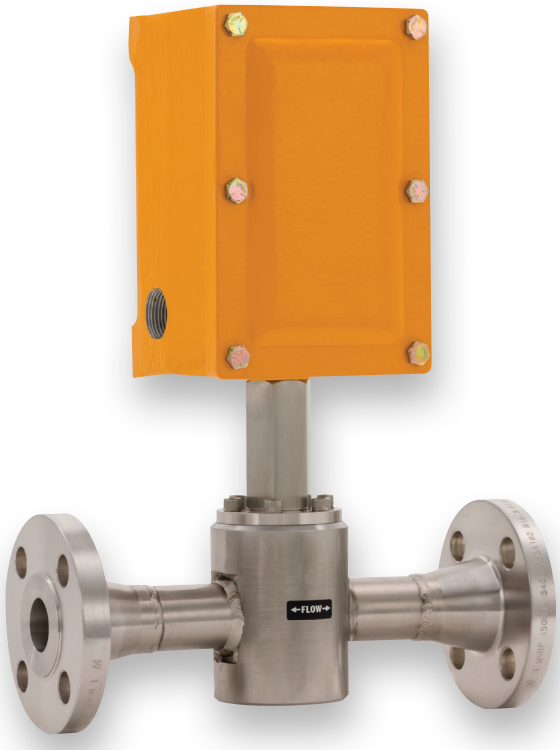


PTB 08
ATEX 1027

Interface detection, including dyed fuels, plus refined fuels quality control with the industry's most compact colorimeter/haze analyzer

## OUTPUT

- 4-20 mA for Haze
- Selectable 4-20 mA for ASTM, Saybolt, or Platinum Cobalt color scales
- RS485

## APPLICATIONS

- Interface detection, including dyed fuels
- Refined fuels quality control
- Turbidity/haze detection
- Jet fuel quality control

## AVAILABLE MODEL AND MOUNTING OPTIONS

- Insertable model with 2", 3", or 4" flanged seal housing or 2" MNPT seal housing
- FT FlowThrough model with 1" or 2" flanges

## KEY FEATURES

- Measures color + haze in refined products with an accuracy of ± 1% for color
- Only colorimeter unit on the market with fully incorporated electronics
- Offers greater accuracy over other, 3-LED models
- Long-term performance with minimal power and maintenance requirements
- Automatically adjusts for electronic noise, LED fluctuations, and varying absorption rates
- Measures full spectrum of visible color (CIE 1931)

# Kam® THA™

Turbidity Haze Analyzer

In-line turbidity detection for quality control at refineries, pipeline terminals, and marketing

PTB 08 ATEX 1027

## APPLICATIONS

- Refinery distribution
- Pipeline terminals
- Distillation column
- Marketing
- Dispute resolution

## OUTPUTS

- 4-20 mA for 0-100% turbidity or haze
- RS485

## KEY FEATURES

- Same proven technology as the KAM® CHA™
- Simple, insertable solution for turbidity detection in pipelines
- Real-time monitoring of refined fuels including diesel, gasoline, and jet
- Long lasting LED's and no moving parts for minimal maintenance

## AVAILABLE MODEL AND MOUNTING OPTIONS

- Insertable model with 2", 3", or 4" flanged seal housing or 2" MNPT seal housing
- FT FlowThrough model with 1" or 2" flanges

# Kam® OOD™

Optical Oil Detector

Kam® Simple Precision™

PTB 08
ATEX 1027
PENDING

PPM-level oil-in-water detector with the same simplicity and ease of installation as other KAM® products

## OUTPUT

- 4-20 mA
- RS232
- RS485 (MODBUS)
- HART protocol
- Alarm (2)

## APPLICATIONS

- Wastewater
- Bilge water
- Storm water
- Produced water
- 3-phase separator

## AVAILABLE MODEL AND MOUNTING OPTIONS

- Insertable model with 2", 3", or 4" flanged seal housing or 2" MNPT seal housing
- 3/4" or 1" MNPT FlowThrough for analyzer loop

## KEY FEATURES

- Minimum range 0-50 ppm, maximum range 0-5000 ppm*
- Accuracy 1% of range*
- Minimum detection 0.5 ppm with 0-50 ppm range
- Optic design minimizes effects of temperature, density, and salinity
- LED's for long-term performance and minimal power and maintenance requirements
- Mounts perpendicular to flow for self cleaning of lens

* Available ranges and accuracies are hydrocarbon dependent. Please consult factory for your application.

Kam® Simple Precision™

For 30 years KAM CONTROLS has served the petroleum industry with innovative measurement solutions for a wide variety of applications.

The company's Simple Precision™ philosophy creates an environment focused on the absolute highest standards for quality, accuracy, and ease of use, saving KAM customers time, money, and invaluable man-hours.

KAM® has pioneered a multitude of technologies and applications,including: the first ever insertable ultrasonic flow meter, being the first to apply coulometric Karl Fischer titration to water measurement in crude oil, the patented KAM® SMP™ Static Mixing Plate, and pioneering the use of optics for fluorescence and interface detection in the pipeline.

Today, KAM CONTROLS remains at the forefront of industry technology with the patented, multi-antenna KAM® OWD® Water Cut Meter, the KAM® ATD™ Automatic Tank Dewatering probe, and the KAM® THA™ Turbidity Haze Analyzer for in-line turbidity monitoring.

All KAM CONTROLS products are developed and manufactured at company headquarters in Houston, Texas by a dedicated team of engineers and technicians.

KAM CONTROLS IS AN ISO 9001 CERTIFIED COMPANY

**FOR MORE INFORMATION ON KAM PRODUCTS**

**visit WWW.KAM.COM**

call +1 713 784 0000

fax +1 713 784 0001

email sales@kam.com

Proud member of API, ASTM, EI and IASH

KAM CONTROLS, INC.

3939 Ann Arbor Drive

Houston, TX 77063 USA

KAM CONTROLS reserves the right to make changes to this document without notice



Kam®